2-5-2015

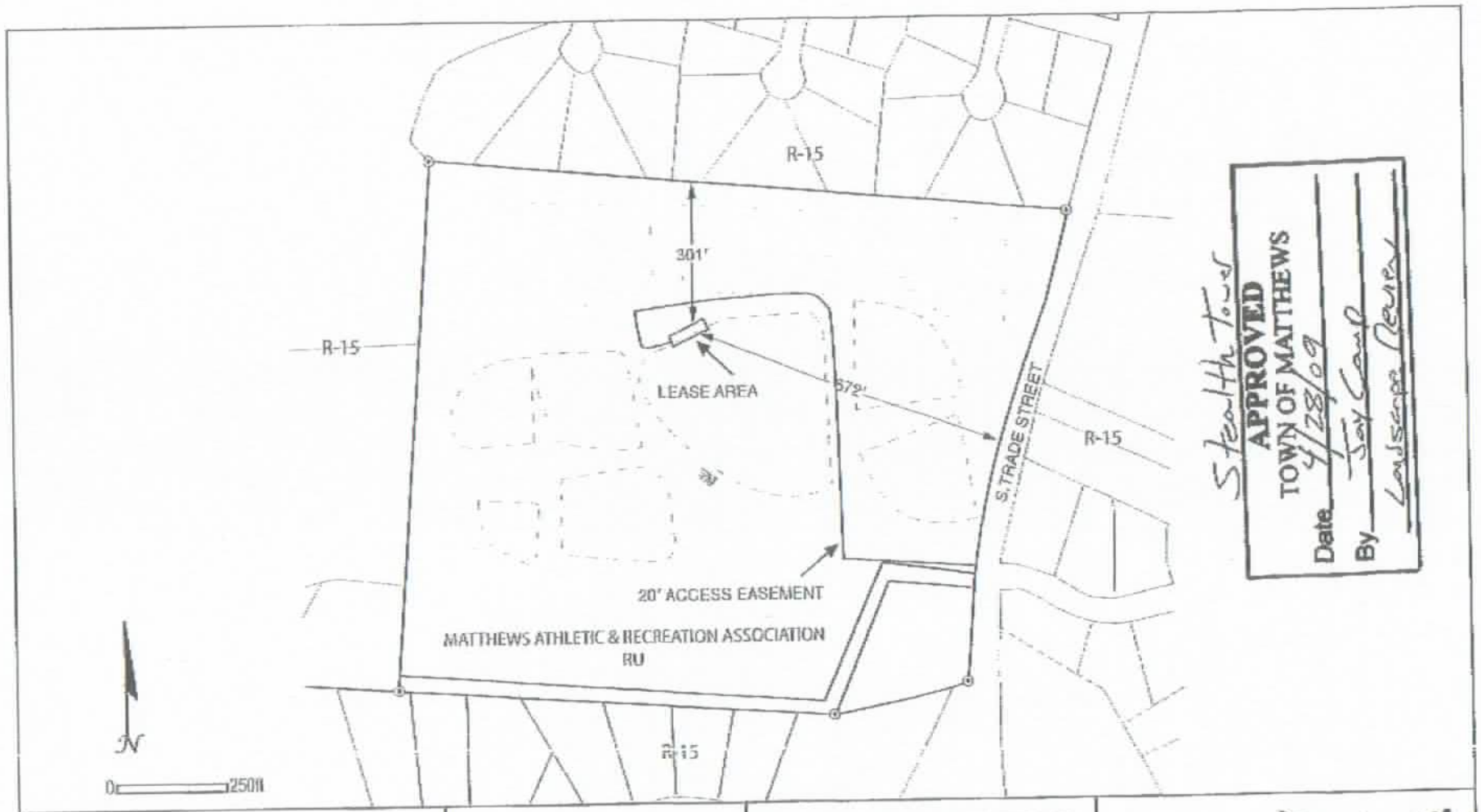

SHEET TITLE: SITE PLAN	DATE: 03/19/2009	SITE NAME: ARTHUR GOODMAN PARK	BEACON TOWERS
	DATE: 04/16/2009	SITE NUMBER: NC-415	
SHEET NO: C-1		SITE ADDRESS: 1200 SOUTH TRADE STREET MATTHEWS, NORTH CAROLINA 28105	Beacon Towers, LLC P.O. Box 279 Awendaw, SC 843.334.9731 beacontowers@bellsouth.net "Leading the Way"

Area Current Coverage Levels

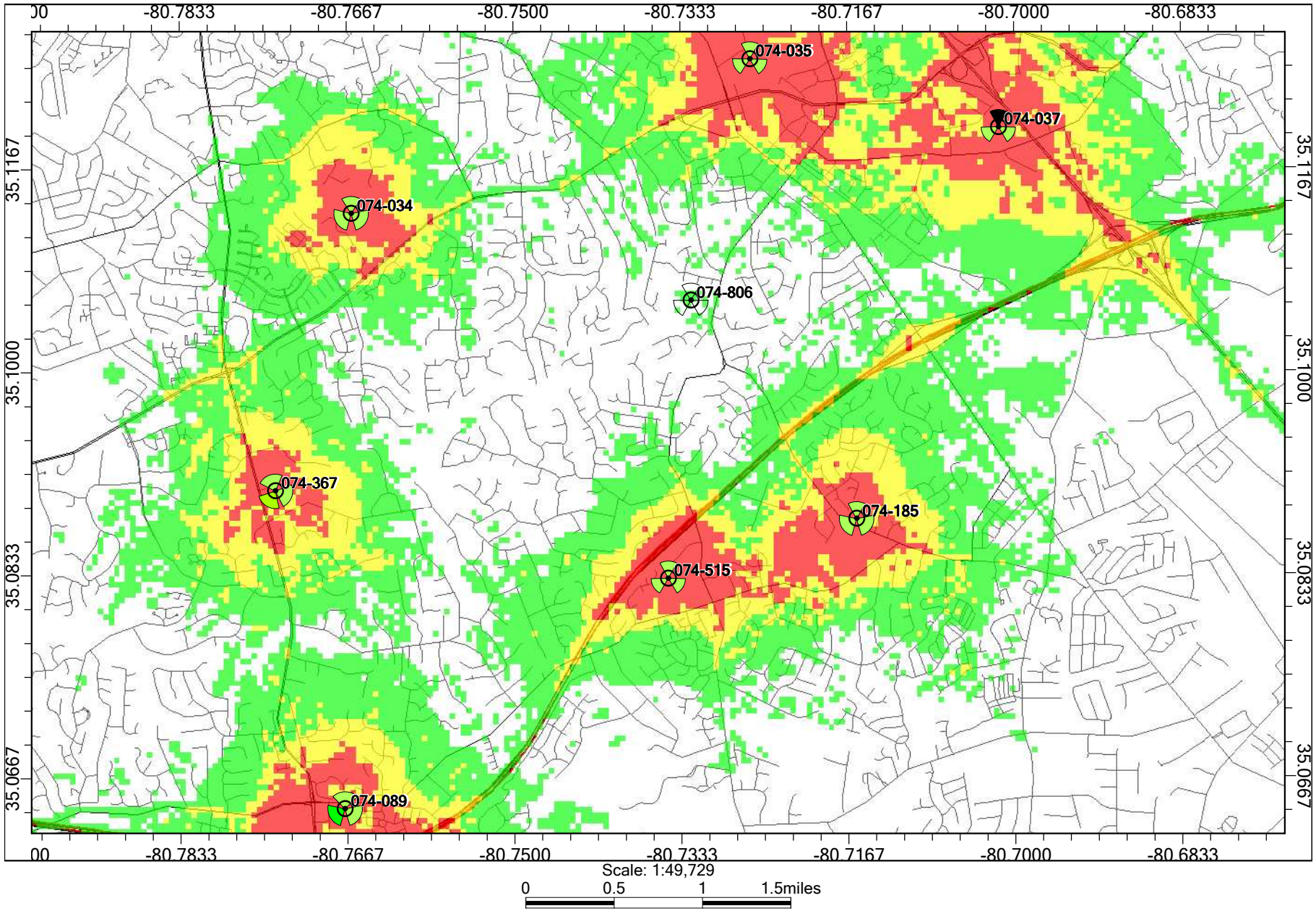

2-5-2015

074-806 Proposed Coverage Levels (120 feet)

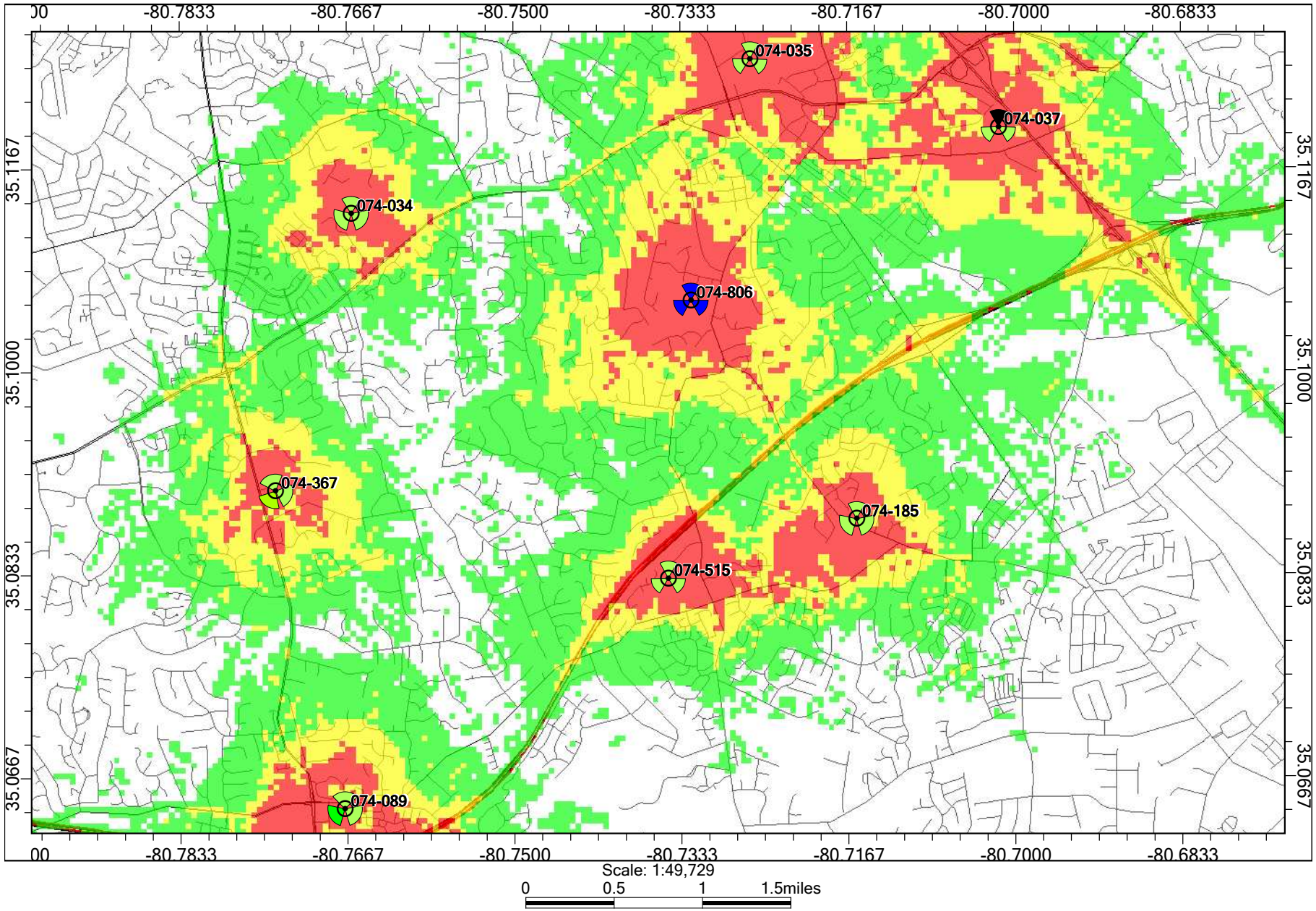

2-5-2015

PROJECT SUMMARY

SITE NAME:	ARTHUR GOODMAN PARK
SITE ADDRESS:	1132 SOUTH TRADE STREET MATTHEWS, NC 28105
JURISDICTION:	MECKLENBURG COUNTY
COUNTY:	MECKLENBURG COUNTY
ZONING:	RU
PROPERTY OWNER:	MATTHEWS ATHLETIC & RECEATION ASSOCIATION
CONTACT:	CITY OF MATTHEWS
PHONE:	(704) 847–0752
APPLICANT:	MARA HOLDINGS, LLC. 1251 TERRY ROAD WINSTON SALEM, NC 27107
CONTACT:	KEITH POWELL 843–324–9745

SITE COORDINATES:

TOWER 1:		
LATITUDE:	N. 35° 06' 20.8"	(NAD 83)
LONGITUDE:	W. 80° 43' 56.4"	(NAD 83)
ELEVATION:	680.5' AMSL	(NAVD 88)

OCCUPANCY:	UNMANNED
CONSTRUCTION TYPE:	COMMUNICATIONS LIGHT POLE MODIFICATION

HANDICAPPED REQUIREMENTS

FACILITY IS UNMANNED AND NOT FOR HUMAN HABITATION. HANDICAP ACCESS NOT REQUIRED.

PLUMBING REQUIREMENTS

FACILITY HAS NO PLUMBING.

CONSULTING TEAM

ARCHITECTURAL – ENGINEERING FIRM:
TELECAD WIRELESS SITE DESIGN, INC.
1961 NORTHPOINT BOULEVARD., SUITE 130
HIXSON, TN 37343
CONTACT: CHRIS EVANS
PHONE: (423) 843–9500 FAX: (423) 843–9509

SURVEYING FIRM:
SOUTHEAST GEOMATICS GROUP INC.
P.O. BOX 2431
INDIAN TRAIL, NC 28079
CONTACT: BRIAN CLARK
PHONE: (704) 776–0914

TELEPHONE COMPANY:
WINDSTREAM
CONTACT: TIM WOODWARD
PHONE: 704–845–7641

POWER COMPANY:
DUKE ENERGY
CONTACT: CASEY YELTON
PHONE: 704–821–2141

MARA HOLDINGS, LLC.

SITE NAME
ARTHUR GOODMAN PARK

SITE I.D.
NC–1009

E911 ADDRESS
1132 SOUTH TRADE STREET
MATTHEWS, NC 28105

PROJECT TYPE
(1)–120' COMMUNICATIONS FACILITY
STEALTH LIGHT POLE

VICINITY MAP

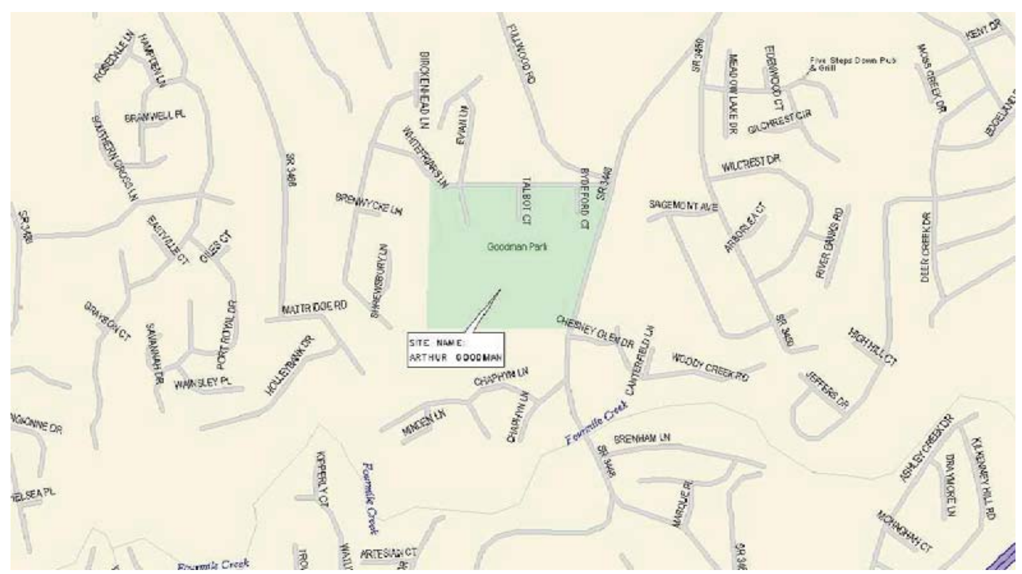

DRIVING DIRECTIONS

FROM LOCAL CITY OR NEAREST MAJOR HIGHWAY INTERSECTION:

DIRECTIONS: FROM I–485 (EAST OF CHARLOTTE), TAKE EXIT 52 (EAST JOHN STREET / OLD MONROE ROAD). GO WEST/NORTH ON EAST JOHN STREET/OLD MONROE ROAD FOR 1.0 MILE. TURN LEFT ON SOUTH TRADE STREET. TRAVEL 0.87 MILES ON SOUTH TRADE STREET. ARTHUR GOODMAN PARK WILL BE ON THE RIGHT.

SHEET SCALE FACTOR:

PLOT SIZE:

11"x17": "TO SCALE"
24"x36": 2X SCALE AS NOTED

1 (800) 632–4949

CONTRACTOR TO CALL NORTH CAROLINA ONE–CALL SYSTEMS AT LEAST (2) WORKING DAYS PRIOR TO DIGGING.

SHEET INDEX

NO.	DESCRIPTION
T–1	TITLE SHEET
T–2	ABBREVIATIONS & SYMBOLS LEGEND
GN–1	GENERAL NOTES
C–1	SITE PLAN
C–2	ENLARGED SITE PLAN
C–3	LANDSCAPE PLAN
C–4	SITE ELEVATIONS
C–5	SITE DETAILS
C–6	FENCE DETAILS

ENGINEER'S LICENSE

I CERTIFY THAT THESE DRAWINGS WERE PREPARED BY ME OR UNDER MY DIRECT SUPERVISION AND CONTROL AND TO THE BEST OF MY KNOWLEDGE AND BELIEF COMPLY WITH THE REQUIREMENTS OF THE NORTH CAROLINA BUILDING CODE, 2006 EDITION.

LICENSED ENGINEER – STATE OF NORTH CAROLINA

12/31/14 10/29/14
EXPIRES: SIGNED:

APPROVALS

LANDLORD		DATE	

STATE COUNTY MAP

NORTH CAROLINA

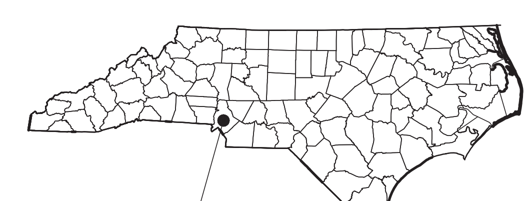

MECKLENBURG COUNTY

MARA HOLDINGS, LLC.

TeleCAD Wireless
1961 NORTHPOINT BLVD, SUITE 130
HIXSON, TN 37343
PH: 423-843-9500
FAX: 423-843-9509

THE INFORMATION CONTAINED IN THIS SET OF DOCUMENTS IS PROPRIETARY BY NATURE. ANY USE OR DISCLOSURE OTHER THAN THAT WHICH RELATES TO THE CLIENT IS STRICTLY PROHIBITED.

A&E PROJECT #:	N/A
DRAWN BY:	CAE
CHECKED BY:	CTD

REVISIONS

NO.	DATE	DESCRIPTION
1	10/29/14	TOWER MODIFIED
0	11/11/09	CONSTRUCTION ISSUE
B	11/01/09	PRELIMINARY ISSUE
A	10/20/09	PRELIMINARY ISSUE

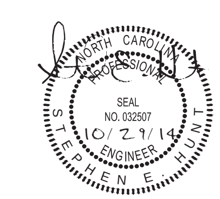

PROJECT No.
N/A

SITE NAME:
ARTHUR GOODMAN PARK

SITE NUMBER:
NC-1009

SITE ADDRESS:
1132 SOUTH TRADE STREET
MATTHEWS, NC 28105

DESIGN TYPE:
COMMUNICATIONS LIGHT POLE MODIFICATION

SHEET TITLE:
TITLE SHEET

DRAWING NO.	REVISION:
T-1	1

2-5-2015

ABBREVIATIONS

AB	ANCHOR BOLT
AC	ASPHALTIC CONCRETE
A/C	AIR CONDITIONING
ADJ	ADJUSTABLE
A.F.F.	ABOVE FINISH FLOOR
ARCH	ARCHITECTURAL
APPROX	APPROXIMATELY
A.G.L.	ABOVE GRADE LEVEL
A.M.S.L.	ABOVE MEAN SEA LEVEL
BD	BOARD
BLDG	BUILDING
BLKG	BLOCKING
BOT	BOTTOM
BSMT	BASEMENT
BTS	BASE TRANSCEIVER STATION
C	COURSE(S)
CEM	CEMENT
CL	CHAIN LINK
CLG	CEILING
CLR	CLEAR
COL	COLUMN
CONC	CONCRETE
CONST	CONSTRUCTION
CONT	CONTINUOUS
CORR	CORRIDOR
CO	CONDUIT ONLY
DIA	DIAMETER
DBL	DOUBLE
DEPT	DEPARTMENT
DEMO	DEMOLITION
DIM	DIMENSION
DN	DOWN
DR	DOOR
DTL	DETAIL
DWG	DRAWING
(E)	EXISTING
EA	EACH
ELEC	ELECTRIC
ELEV	ELEVATION
EQUIP	EQUIPMENT
EXP	EXPANSION
EXT	EXTERIOR
FA	FIRE ALARM
FB	FLAT BAR
FF	FINISH FLOOR
FH	FLAT HEAD
FIN	FINISH(ED)
FLR	FLOOR
FOS	FACE OF STUDS
FS	FINISH SURFACE
FT	FOOT, FEET
FTG	FOOTING
FW	FINISH WALL
F.G.	FINISH GRADE
FUT	FUTURE
GA	GAUGE
GALV	GALVANIZED
GL	GLASS
GR	GRADE
GYP	GYPSUM
GFCI	GROUND FAULT CIRCUIT INTERRUPT
GND	GROUND
HC	HOLLOW CORE
HDW	HARDWARE
HTR	HEATER
HM	HOLLOW METAL
HORIZ	HORIZONTAL
HR	HOUR
HT	HEIGHT
HV	HIGH VOLTAGE
ID	INSIDE DIMENSION
INS	INSULATION
INT	INTERIOR
JT	JOINT
LAM	LAMINATED
LBS	POUNDS
LT	LIGHT
LA	LIGHTNING ARRESTOR
LNA	LOW NOISE AMPLIFIER
MFR	MANUFACTURER
MAT	MATERIAL
MAX	MAXIMUM
MECH	MECHANICAL
MIN	MINIMUM
MISC	MISCELLANEOUS
ML	METAL LATH
MO	MASONRY OPENING
MS	MACHINE SCREW
MTD	MOUNTED
MTL	METAL
(N)	NEW
NIC	NOT IN CONTRACT
NO	NUMBER
NTS	NOT TO SCALE
O	OVERHEAD
OA	OVERALL
O.C.	ON CENTER
OPNG	OPENING
OPP	OPPOSITE
PARTN	PARTITION
PL	PLATE
PLAS	PLASTER
PLYWD	PLYWOOD
POC	POINT OF CONNECTION
PROP	PROPERTY
PT	PRESSURE TREATED
R	RISER
REQD	REQUIRED
RD	ROOF DRAIN
RM	ROOM
RMS	ROOMS
RO	ROUGH OPENING
SC	SOLID CORE
SCHED	SCHEDULE
SECT	SECTION
SHT	SHEET
SIM	SIMILAR
SPECS	SPECIFICATIONS
SS	STAINLESS STEEL
STL	STEEL
STOR	STORAGE
STRUCT	STRUCTURAL
SUSP	SUSPENDED
SW	SWITCH
SWBO	SWITCHBOARD
THK	THICK
TI	TENANT IMPROVEMENT
TMA	TOWER MOUNTED AMPLIFIER
TOS	TOP OF SURFACE
TS	TUBE STEEL
TYP	TYPICAL
U	UNDERGROUND
UNO	UNLESS NOTED OTHERWISE
VCT	VINYL COMPOSITION TILE
VERT	VERTICAL
V.I.F.	VERIFY IN FIELD
VG	VERTICAL GRAIN
W/	WITH
WD	WOOD
WR	WATER RESISTANT
WT	WEIGHT
XFMR	TRANSFORMER
@	AT
[	CHANNEL
℄	CENTERLINE
∠	ANGLE
℞	PROPERTY LINE

SYMBOLS:

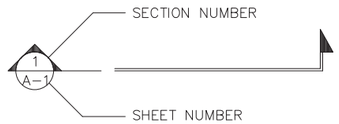

BUILDING SECTION REFERENCE

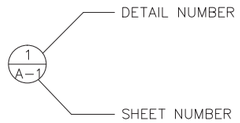

DETAIL REFERENCE

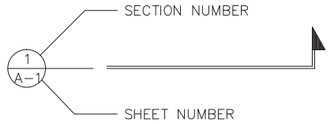

DETAIL SECTION REFERENCE

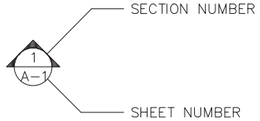

ELEVATION VIEW REFERENCE

- # — KEY NOTE REFERENCE
- 101 — DOOR NUMBER
- 101 — AREA AND/OR ROOM NUMBER
- A / 2 — MECHANICAL UNIT
- UTILITY POLE
- WORK POINT
- # — REVISION OR CONTROL POINT
- (REFERENCE POINT) / (ELEVATION) — ELEVATION REFERENCE

- MASONRY
- BRICK
- CONCRETE
- EARTH
- STEEL
- GRAVEL
- CENTER LINE
- PROPERTY LINE
- LEASE LINE
- EASEMENT LINE
- RIGHT-OF-WAY
- CHAIN LINK FENCE
- WOOD FENCE
- SILT FENCE
- BELOW GRADE ELECTRIC (UE)
- BELOW GRADE TELEPHONE (UT)
- OVERHEAD ELECTRIC/TELEPHONE (OE/OT)
- OVERHEAD TELEPHONE (UT)
- OVERHEAD ELECTRIC (UE)
- CONTOUR (276)
- TREE PROTECTION FENCE
- TREE LINE
- TREES, SHRUBS, BUSHES
- SANITARY SEWER LINE (SAN)
- WATER LINE (WL)
- NATURAL GAS LINE (NG)

MARA HOLDINGS, LLC.

TeleCAD Wireless
1961 NORTHPOINT BLVD, SUITE 130
HIXSON, TN 37343
PH: 423-843-9500
FAX: 423-843-9509

THE INFORMATION CONTAINED IN THIS SET OF DOCUMENTS IS PROPRIETARY BY NATURE. ANY USE OR DISCLOSURE OTHER THAN THAT WHICH RELATES TO THE CLIENT IS STRICTLY PROHIBITED.

A&E PROJECT #:	N/A
DRAWN BY:	CAE
CHECKED BY:	CTD

REVISIONS

NO.	DATE	DESCRIPTION
1	10/29/14	TOWER MODIFIED
0	11/11/09	CONSTRUCTION ISSUE
B	11/01/09	PRELIMINARY ISSUE
A	10/20/09	PRELIMINARY ISSUE

PROJECT No.: N/A

SITE NAME: ARTHUR GOODMAN PARK

SITE NUMBER: NC-1009

SITE ADDRESS: 1132 SOUTH TRADE STREET MATTHEWS, NC 28105

DESIGN TYPE: COMMUNICATIONS LIGHT POLE MODIFICATION

SHEET TITLE: ABBREVIATIONS & SYMBOLS LEGEND

DRAWING NO.	REVISION:
T-2	1

2-5-2015

GENERAL NOTES

1. ALL REFERENCES TO OWNER HEREIN SHALL BE CONSTRUED TO MEAN MARA HOLDINGS, LLC OR IT'S DESIGNATED REPRESENTATIVE.
2. ALL WORK PRESENTED ON THESE DRAWINGS MUST BE COMPLETED UNLESS NOTED OTHERWISE. THE CONTRACTOR MUST HAVE CONSIDERABLE EXPERIENCE IN PERFORMANCE OF WORK SIMILAR TO THAT DESCRIBED HEREIN. BY ACCEPTANCE OF THIS ASSIGNMENT, THE CONTRACTOR IS ATTESTING THAT HE DOES HAVE SUFFICIENT EXPERIENCE AND ABILITY. THAT HE IS KNOWLEDGEABLE OF THE WORK TO BE PERFORMED AND THAT HE IS LICENSED AND PROPERLY REGISTERED TO DO THIS WORK IN THE STATE AND/OR COUNTY IN WHICH IT IS TO BE PERFORMED.
3. UNLESS SHOWN OR NOTED OTHERWISE ON THE CONTRACT DRAWINGS, OR IN THE SPECIFICATIONS, THE FOLLOWING NOTES SHALL APPLY TO THE MATERIALS LISTED HEREIN, AND TO THE PROCEDURES TO BE USED ON THIS PROJECT.
4. ALL HARDWARE ASSEMBLY MANUFACTURER'S INSTRUCTIONS SHALL BE FOLLOWED EXACTLY AND SHALL SUPERCEDE ANY CONFLICTING NOTES ENCLOSED HEREIN.
5. IT IS THE CONTRACTOR'S SOLE RESPONSIBILITY TO DETERMINE ERECTION PROCEDURE AND SEQUENCE TO INSURE THE SAFETY OF THE STRUCTURE AND ITS COMPONENT PARTS DURING ERECTION AND/OR FIELD MODIFICATIONS. THIS INCLUDES, BUT IS NOT LIMITED TO, THE ADDITION OF WHATEVER TEMPORARY BRACING, GUYS OR TIE DOWNS THAT MAY BE NECESSARY. SUCH MATERIAL SHALL BE REMOVED AND SHALL REMAIN THE PROPERTY OF THE CONTRACTOR AFTER COMPLETION OF THE PROJECT.
6. ALL DIMENSIONS, ELEVATIONS AND EXISTING CONDITIONS SHOWN ON THE DRAWINGS SHALL BE FIELD VERIFIED BY THE CONTRACTOR AND THE TESTING AGENCY PRIOR TO BEGINNING ANY MATERIALS ORDERING, FABRICATION OR CONSTRUCTION WORK ON THIS PROJECT. ANY DISCREPANCIES SHALL BE IMMEDIATELY BROUGHT TO THE ATTENTION OF THE OWNER AND THE OWNER'S ENGINEER. THE DISCREPANCIES MUST BE RESOLVED BEFORE THE CONTRACTOR IS TO PROCEED WITH THE WORK. THE CONTRACT DOCUMENTS DO NOT INDICATE THE METHOD OF CONSTRUCTION. THE CONTRACTOR SHALL SUPERVISE AND DIRECT THE WORK AND SHALL BE SOLELY RESPONSIBLE FOR ALL CONSTRUCTION MEANS, METHODS, TECHNIQUES, SEQUENCES AND PROCEDURES, OBSERVATION VISITS TO THE SITE BY THE OWNER AND/OR THE ENGINEER SHALL NOT INCLUDE INSPECTION OF THE PROTECTIVE MEASURES OR THE CONSTRUCTION PROCEDURES.
7. ALL MATERIALS AND EQUIPMENT FURNISHED SHALL BE NEW AND OF GOOD QUALITY, FREE FROM FAULTS AND DEFECTS AND IN CONFORMANCE WITH THE CONTRACT DOCUMENTS. ANY AND ALL SUBSTITUTIONS MUST BE PROPERLY APPROVED AND AUTHORIZED IN WRITING BY THE OWNER AND ENGINEER PRIOR TO INSTALLATION. THE CONTRACTOR SHALL FURNISH SATISFACTORY EVIDENCE AS TO THE KIND AND QUALITY OF THE MATERIALS AND EQUIPMENT BEING SUBSTITUTED.
8. THE CONTRACTOR SHALL BE RESPONSIBLE FOR INITIATING, MAINTAINING AND SUPERVISING ALL SAFETY PRECAUTIONS AND PROGRAMS IN CONNECTION WITH THE WORK. THE CONTRACTOR IS RESPONSIBLE FOR INSURING THAT THIS PROJECT AND RELATED WORK COMPLIES WITH ALL APPLICABLE LOCAL, STATE AND FEDERAL SAFETY CODES AND REGULATIONS GOVERNING THIS WORK.
9. ALL WORK SHALL BE COMPLETED IN ACCORDANCE WITH THE LATEST EDITION OF THE LOCAL BUILDING CODE.
10. ALL PROPOSED CELLULAR EQUIPMENT AND FIXTURES SHALL BE FURNISHED BY OWNER FOR INSTALLATION BY THE CONTRACTOR, UNLESS SPECIFICALLY NOTED OTHERWISE HEREIN.
11. ACCESS TO THE PROPOSED WORK SITE MAY BE RESTRICTED. THE CONTRACTOR SHALL COORDINATE INTENDED CONSTRUCTION ACTIVITY, INCLUDING WORK SCHEDULE AND MATERIALS ACCESS WITH THE RESIDENT LEASING AGENT FOR APPROVAL.
12. RADIO EQUIPMENT INSTALLATION SHALL BE IN ACCORDANCE WITH THE MANUFACTURER'S SPECIFICATIONS.

STRUCTURAL NOTES

1. DESIGN REQUIREMENTS PER LOCAL BUILDING CODE AND THE E1A/TIA-222-F STRUCTURAL STANDARDS FOR STEEL ANTENNAS TOWERS AND SUPPORTING STRUCTURES.
2. STRUCTURAL STEEL SHALL CONFORM TO THE LATEST EDITION OF A.I.S.C. SPECIFICATIONS FOR STRUCTURAL STEEL BUILDINGS-ALLOWABLE STRESS DESIGN AND PLASTIC DESIGN INCLUDING THE COMMENTARY AND THE A.I.S.C. CODE OF STANDARD PRACTICE.
3. STRUCTURAL STEEL PLATES AND SHAPES SHALL CONFORM TO ASTM A36. ALL STRUCTURAL STEEL PIPES SHALL CONFORM TO ASTM A53 GRADE 8. ALL STRUCTURAL STEEL TUBING SHALL CONFORM TO ASTM A500 GRACE 8. ALL STRUCTURAL STEEL COMPONENTS AND FABRICATED ASSEMBLIES SHALL BE HOT DIP GALVANIZED AFTER FABRICATION.
4. WELDING SHALL BE IN ACCORDANCE WITH THE AMERICAN WELDING SOCIETY (AWS) D.1.1-96. STRUCTURAL WELDING CODE-STEEL WELD ELECTRODES SHALL BE E70XX.
5. ALL COAXIAL CABLE CONNECTORS AND TRANSMITTER EQUIPMENT SHALL BE AS SPECIFIED BY THE OWNER AND IS NOT INCLUDED IN THESE CONSTRUCTION DOCUMENTS. THE CONTRACTOR SHALL FURNISH ALL CONNECTION HARDWARE REQUIRED TO SECURE THE CABLES. CONNECTION HARDWARE SHALL BE STAINLESS STEEL.
6. NORTH ARROW SHOWN ON PLANS REFERS TO TRUE NORTH. CONTRACTOR SHALL VERIFY NORTH AND INFORM OWNER OF ANY DISCREPANCY BEFORE STARTING CONSTRUCTION.
7. ALL CAST IN PLACE CONCRETE SHALL BE MIXED AND PLACED IN ACCORDANCE WITH THE REQUIREMENTS OF ACI 318 AND AC1 301, AND SHALL HAVE A 28 DAY MINIMUM COMPRESSIVE STRENGTH OF 3000 PSI (U.O.N.). CONCRETE SHALL BE PLACED AGAINST UNDISTURBED SOIL UNLESS OTHERWISE NOTED. MINIMUM CONCRETE COVER SHALL BE 3 INCHES UNLESS OTHERWISE NOTED.
8. ALL REINFORCING STEEL SHALL CONFORM TO ASTM 615 GRADE 80, DEFORMED BILLET STEEL BARS. WELDED WIRE FABRIC REINFORCING SHALL CONFORM TO ASTM A185.
9. THE FABRICATION AND ERECTION OF STRUCTURAL STEEL SHALL CONFORM TO THE LATEST A.I.S.C. SPECIFICATIONS.
10. ALL CONNECTIONS NOT FULLY DETAILED ON THESE PLANS SHALL BE DETAILED BY THE STEEL FABRICATOR IN ACCORDANCE WITH A.I.S.C. SPECIFICATIONS.
11. HOT-DIP GALVANIZE ITEMS SPECIFIED TO BE ZINC-COATED. AFTER FABRICATION WHERE PRACTICAL. GALVANIZING: ASTM A 123, ASTM A 153/A 153M OR ASTM A 653/A 653M, G90, AS APPLICABLE.
12. REPAIR DAMAGED SURFACES WITH GALVANIZING REPAIR METHOD AND PAINT CONFORMING TO ASTM A 780 OR BY APPLICATION OF STICK OR THICK PASTE MATERIAL SPECIFICALLY DESIGNED FOR REPAIR OF GALVANIZING. CLEAN AREAS TO BE REPAIRED, AND REMOVE SLAG FROM WELDS. HEAT SURFACES TO WHICH STICK OR PASTE MATERIAL IS APPLIED WITH A TORCH TO A TEMPERATURE SUFFICIENT TO MELT THE METALLICS. IN STICK OR PASTE, SPREAD MOLTEN MATERIAL UNIFORMLY OVER SURFACES TO BE COATED AND WIPE OFF EXCESS MATERIAL.
13. CONTRACTOR SHALL FOLLOW THE MANUFACTURER'S INSTRUCTIONS/ SPECIFICATIONS IF NO INFORMATION IS CONTAINED IN THESE PLANS OR IF THE MANUFACTURER'S SPECIFICATIONS ARE STRICTER.

PERMITS

1. CONTRACTOR SHALL SECURE ALL NECESSARY PERMITS FOR THIS PROJECT FROM ALL APPLICABLE GOVERNMENTAL AGENCIES. (NOT SUPPLIED BY OWNER)
2. ANY PERMITS WHICH MUST BE OBTAINED SHALL BE THE CONTRACTORS RESPONSIBILITY. THE CONTRACTOR SHALL BE RESPONSIBLE FOR ABIDING BY ALL CONDITIONS AND REQUIREMENTS OF THE PERMITS. (NOT SUPPLIED BY OWNER)
3. ALL WORK SHALL BE IN ACCORDANCE WITH LOCAL CODES AND THE LATEST APPLICABLE CODES AND STANDARDS.
4. THE CONTRACTOR SHALL NOTIFY THE APPLICABLE JURISDICTIONAL (STATE, COUNTY, OR CITY) ENGINEER 24 HOURS PRIOR TO THE BEGINNING OF CONSTRUCTION.
5. CONTRACTOR RESPONSIBLE FOR CLOSING AND FILING ALL PERMITS ASSOCIATED WITH SITE.

UTILITIES

1. CONTRACTOR SHALL CONTACT A SUBSURFACE UTILITY LOCATOR FOR LOCATION OF EXISTING UTILITIES PRIOR TO COMMENCEMENT OF ANY CONSTRUCTION ACTIVITIES. LOCATION OF EXISTING SEWER, WATER LINES, GAS LINES, CONDUITS OR OTHER STRUCTURES ACROSS, UNDERNEATH, OR OTHERWISE ALONG THE LINE OF PROPOSED WORK ARE NOT NECESSARILY SHOWN ON THE PLANS, AND IF SHOWN ARE ONLY APPROXIMATELY CORRECT. CONTRACTOR ASSUMES SOLE RESPONSIBILITY FOR VERIFYING LOCATION AND ELEVATION OF ALL UNDERGROUND UTILITIES (INCLUDING TEST PITS BY HAND IF NECESSARY) IN AREAS OF CONSTRUCTION PRIOR TO STARTING WORK. CONTACT ENGINEER IMMEDIATELY IF LOCATION OR ELEVATION IS DIFFERENT FROM THAT SHOWN ON THE PLANS, OR IF THERE APPEARS TO BE A CONFLICT.
2. CONTRACTOR SHALL COORDINATE ALL UTILITY CONNECTIONS WITH APPROPRIATE UTILITY OWNERS AND CONSTRUCTION MANAGER.
3. DAMAGE BY THE CONTRACTOR TO UTILITIES OR PROPERTY OF OTHERS, INCLUDING EXISTING PAVEMENT AND OTHER SURFACES DISTURBED BY THE CONTRACTOR DURING CONSTRUCTION SHALL BE REPAIRED TO PRE CONSTRUCTION CONDITIONS BY THE CONTRACTOR AT NO ADDITIONAL COST TO THE CLIENT. FOR GRASSED AREAS, SEED AND MULCH SHALL BE ACCEPTABLE..
4. THE CONTRACTOR SHALL COORDINATE WITH THE OWNER THE REQUIREMENTS FOR AND LIMITS OF OVERHEAD AND/OR UNDERGROUND ELECTRICAL SERVICE.
5. THE CONTRACTOR SHALL COORDINATE THE LOCATION OF NEW UNDERGROUND TELEPHONE SERVICE WITH THE TELEPHONE UTILITY AND THE OWNER'S REQUIREMENTS.
6. ALL UNDERGROUND UTILITIES SHALL BE INSTALLED AND TESTED SATISFACTORY PRIOR TO COMMENCING ANY PAVING OPERATIONS WHERE SUCH UTILITIES ARE WITHIN THE LIMITS OF PAVEMENT.

GRADING

1. THE CONTRACTOR SHALL REWORK (DRY, SCARIFY, ETC...) ALL MATERIAL NOT SUITABLE FOR SUB GRADE IN ITS PRESENT STATE. IF THE MATERIAL, AFTER REWORKING, REMAINS UNSUITABLE THEN THE CONTRACTOR SHALL UNDERCUT THIS MATERIAL AND REPLACE WITH APPROVED MATERIAL AT HIS EXPENSE. ALL SUB GRADES SHALL BE PROOF ROLLED WITH A FULLY LOADED TANDEM AXLE DUMP TRUCK PRIOR TO PAVING. ANY SOFT MATERIAL SHALL BE REWORKED OR REPLACED.
2. THE CONTRACTOR IS REQUIRED TO MAINTAIN ALL DITCHES, PIPES, AND OTHER DRAINAGE STRUCTURES FREE FROM OBSTRUCTION UNTIL WORK IS ACCEPTABLE BY THE OWNER. THE CONTRACTOR IS RESPONSIBLE FOR ANY DAMAGES CAUSED BY FAILURE TO MAINTAIN DRAINAGE STRUCTURES IN OPERABLE CONDITION.
3. ALL MATERIALS AND WORKMANSHIP SHALL BE WARRANTED FOR ONE (1) YEAR FROM DATE OF ACCEPTANCE.
4. ALL DIMENSIONS SHALL BE VERIFIED WITH THE PLANS (LATEST REVISION) PRIOR TO COMMENCING CONSTRUCTION. NOTIFY THE OWNER IMMEDIATELY IF DISCREPANCIES ARE DISCOVERED. THE CONTRACTOR SHALL HAVE A SET OF APPROVED PLANS AVAILABLE AT THE SITE AT ALL TIMES WHEN WORK IS BEING PRE FORMED. A DESIGNATED RESPONSIBLE EMPLOYEE SHALL BE AVAILABLE FOR CONTACT BY GOVERNING AGENCY INSPECTORS.

MARA HOLDINGS, LLC REQUIREMENTS

1. AWARDED CONTRACTOR WILL BE REQUIRED TO SIGN AND RETURN A COPY OF AN AWARD LETTER FOR MARA HOLDINGS, LLC'S FILE.
2. CONTRACTOR WILL BE REQUIRED TO PROVIDE PROOF OF LICENSE TO PERFORM WORK IN JURISDICTION AT TIME OF BID AWARD.
3. CONTRACTOR WILL PROVIDE A CONSTRUCTION SCHEDULE PRIOR TO CONSTRUCTION STARTING AND WILL PROVIDE UPDATE/CHANGES (WITH EXPLANATIONS) TO THAT SCHEDULE WHEN/IF ITEMS ARE DELAYED OR PUSHED OUT.
4. CONTRACTOR WILL BE RESPONSIBLE FOR ALL CONCRETE COMPRESSIVE TESTING AND REQUIRED TO SUBMIT FINAL TEST RESULTS WITH CLOSE OUT BOOK.
5. CONTRACTOR WILL BE RESPONSIBLE TO PROVIDE MARA HOLDINGS, LLC PROJECT MANAGER WITH PHOTOS OF THE MAJOR CONSTRUCTION MILESTONES AS THEY OCCUR.
6. CONTRACTOR WILL BE RESPONSIBLE TO ASSIST IN COORDINATING AND OBTAINING PRIMARY POWER TO THE SITE PRIOR TO TOWER ERECTION, AS WELL AS TELCO SERVICE BEFORE PROJECT COMPLETION. (ON SITE VISITS WITH UTILITY COMPANY REPRESENTATIVES AS NECESSARY, ETC....).
7. CONTRACTOR WILL HAVE A REPRESENTATIVE ON A WEEKLY CONFERENCE CALL TO PROVIDE MARA HOLDINGS, LLC WITH SITE SPECIFIC UPDATES. CONTRACTOR SHOULD BE PREPARED FOR RANDOM MARA HOLDINGS, LLC SAFETY INSPECTIONS AT ALL TIMES.
8. CONTRACTOR IS EXPECTED TO MAINTAIN PROPER WORKING CONDITIONS AND PROCEDURES PER OSHA STANDARDS AT ALL TIMES.
9. CONTRACTOR WILL BE REQUIRED TO OBTAIN THE NECESSARY ELECTRICAL PERMITS AND INSPECTIONS AS REQUIRED BY JURISDICTION.
10. CONTRACTOR IS EXPECTED TO CLOSE-OUT THE JOB SITE AS QUICKLY AS POSSIBLE (OBTAINING A CERTIFICATE OF OCCUPANCY AND GETTING MARA HOLDINGS, LLC'S REGIONAL SITE MANAGER'S SIGN-OFF/CHECKLIST APPROVAL ON THE SITE).
11. CONTRACTOR WILL PROVIDE A COMPLETED TOWER HEIGHT VERIFICATION FORM AND TAPE DROP WITHIN 24 HOURS OF REACHING OVERALL HEIGHT.
12. CONTRACTOR WILL UTILIZE ALL OF THE MARA HOLDINGS, LLC PROVIDED DOCUMENTATION INCLUDING BUT NOT LIMITED TO: TOWER CONSTRUCTION ACCEPTANCE CHECKLIST, CONSTRUCTION SCHEDULE, CONSTRUCTION CLOSE-OUT LIST & TOWER HEIGHT VERIFICATION.
13. CONTRACTOR IS RESPONSIBLE FOR CONCRETE COMPRESSION TESTING.
14. CONTRACTOR IS RESPONSIBLE FOR GROUND MEG TESTING.

MARA HOLDINGS, LLC.

TeleCAD Wireless
1961 NORTHPOINT BLVD, SUITE 130
HIXSON, TN 37343
PH: 423-843-9500
FAX: 423-843-9509

THE INFORMATION CONTAINED IN THIS SET OF DOCUMENTS IS PROPRIETARY BY NATURE. ANY USE OR DISCLOSURE OTHER THAN THAT WHICH RELATES TO THE CLIENT IS STRICTLY PROHIBITED.

A&E PROJECT #:	N/A
DRAWN BY:	CAE
CHECKED BY:	CTD

REVISIONS

NO.	DATE	DESCRIPTION
1	10/29/14	TOWER MODIFIED
0	11/11/09	CONSTRUCTION ISSUE
B	11/01/09	PRELIMINARY ISSUE
A	10/20/09	PRELIMINARY ISSUE

PROJECT No.
N/A

SITE NAME:
ARTHUR GOODMAN PARK

SITE NUMBER:
NC-1009

SITE ADDRESS:
1132 SOUTH TRADE STREET
MATTHEWS, NC 28105

DESIGN TYPE:
COMMUNICATIONS LIGHT POLE MODIFICATION

SHEET TITLE:
GENERAL NOTES

DRAWING NO.	REVISION:
GN-1	1

2-5-2015

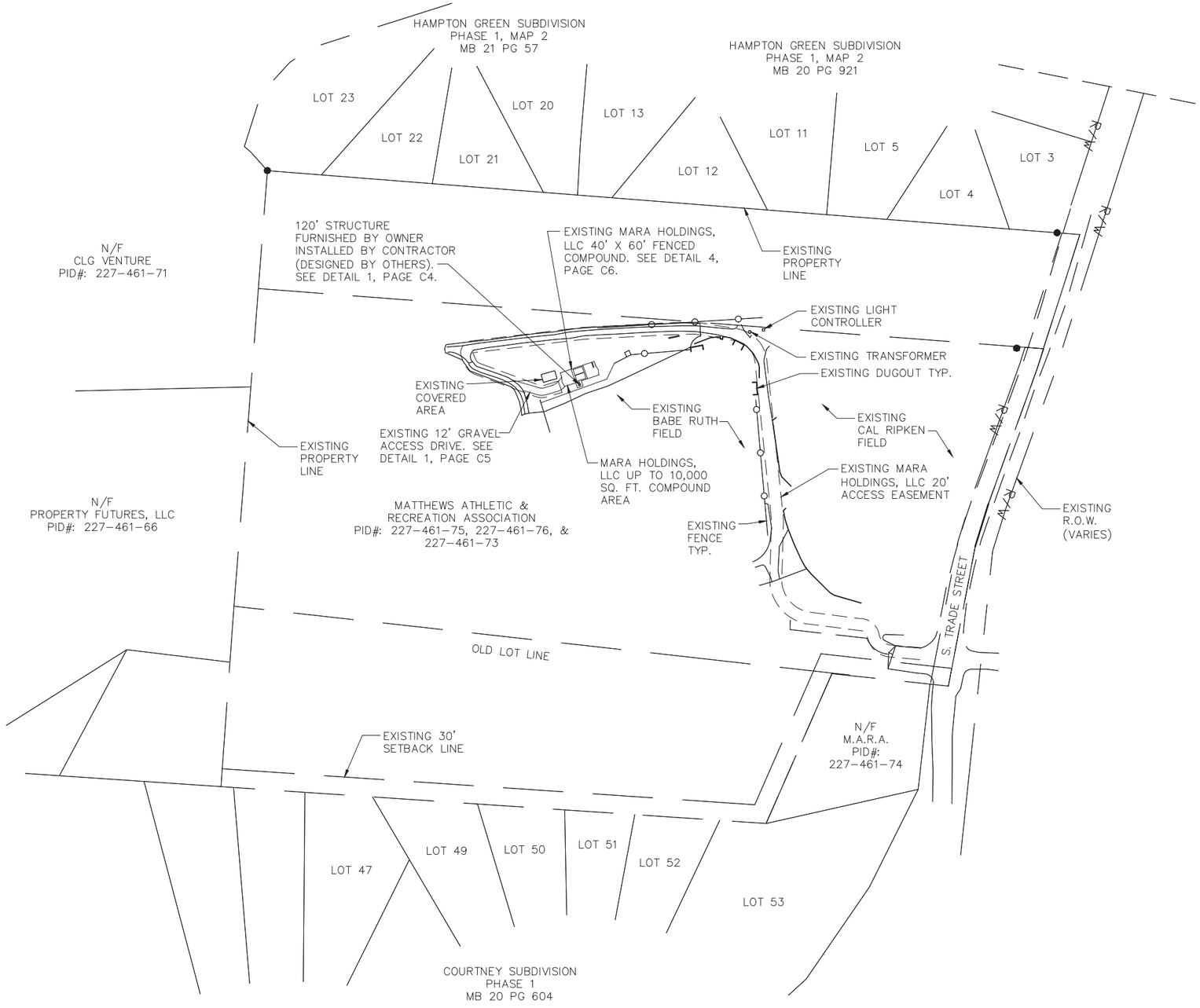

1 | OVERALL SITE PLAN | N.T.S.

MARA
HOLDINGS, LLC.

TeleCAD Wireless
1961 NORTHPOINT BLVD, SUITE 130
HIXSON, TN 37343
PH: 423-843-9500
FAX: 423-843-9509

THE INFORMATION CONTAINED IN THIS SET OF DOCUMENTS IS PROPRIETARY BY NATURE. ANY USE OR DISCLOSURE OTHER THAN THAT WHICH RELATES TO THE CLIENT IS STRICTLY PROHIBITED.

A&E PROJECT #:	N/A
DRAWN BY:	CAE
CHECKED BY:	CTD

REVISIONS

NO.	DATE	DESCRIPTION
1	10/29/14	TOWER MODIFIED
0	11/11/09	CONSTRUCTION ISSUE
B	11/01/09	PRELIMINARY ISSUE
A	10/20/09	PRELIMINARY ISSUE

NORTH CAROLINA PROFESSIONAL ENGINEER SEAL NO. 032507 STEPHEN E. HUNT 10/21/14

PROJECT No.
N/A

SITE NAME:
ARTHUR GOODMAN PARK

SITE NUMBER:
NC-1009

SITE ADDRESS:
1132 SOUTH TRADE STREET
MATTHEWS, NC 28105

DESIGN TYPE:
COMMUNICATIONS LIGHT POLE MODIFICATION

SHEET TITLE:
OVERALL SITE PLAN

DRAWING NO.	REVISION:
C-1	1

2-5-2015

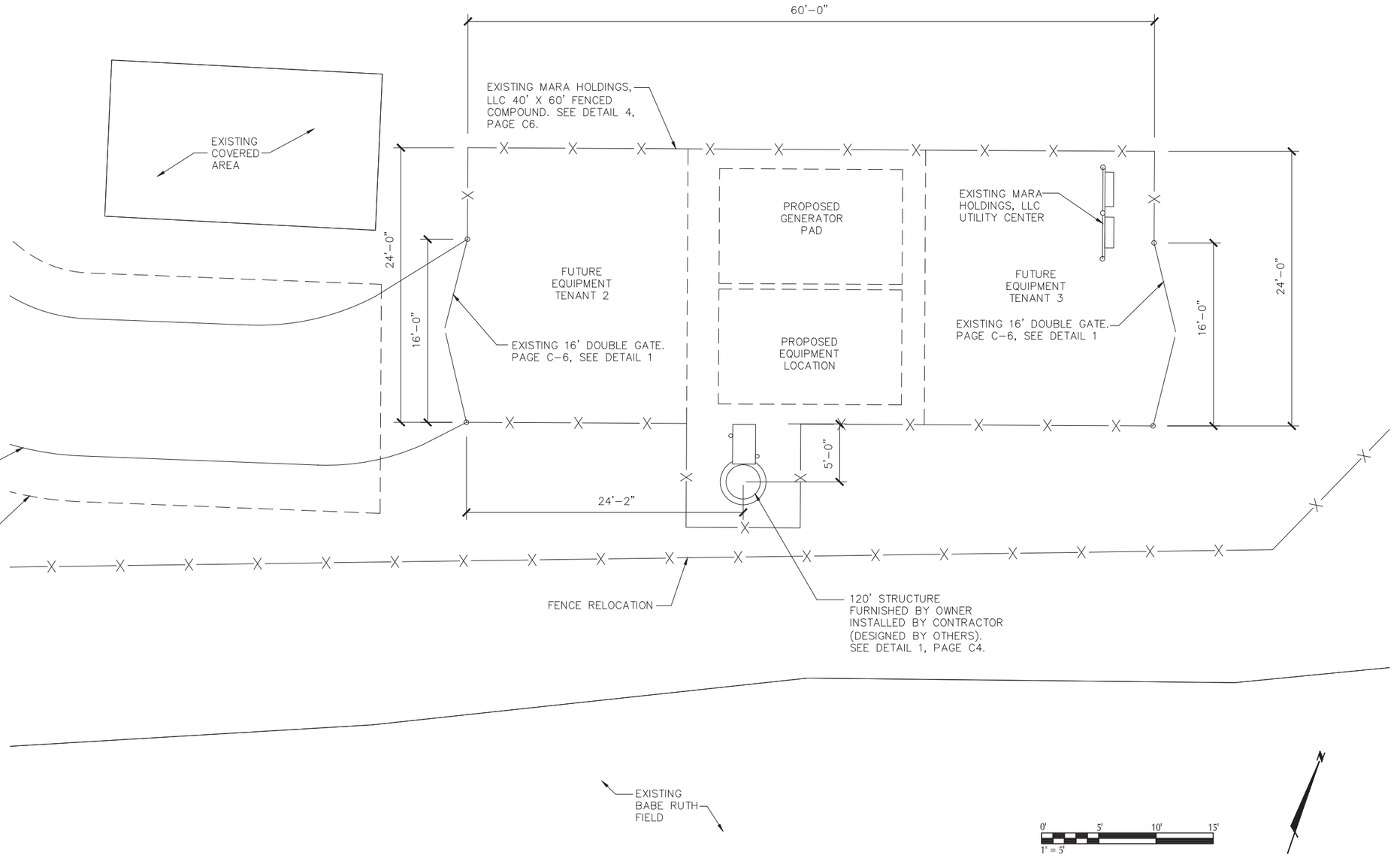

1 SITE PLAN

MARA HOLDINGS, LLC.

TeleCAD Wireless
1961 NORTHPOINT BLVD, SUITE 130
HIXSON, TN 37343
PH: 423-843-9500
FAX: 423-843-9509

THE INFORMATION CONTAINED IN THIS SET OF DOCUMENTS IS PROPRIETARY BY NATURE. ANY USE OR DISCLOSURE OTHER THAN THAT WHICH RELATES TO THE CLIENT IS STRICTLY PROHIBITED.

A&E PROJECT #:	N/A
DRAWN BY:	CAE
CHECKED BY:	CTD

REVISIONS

NO.	DATE	DESCRIPTION
1	10/29/14	TOWER MODIFIED
0	11/11/09	CONSTRUCTION ISSUE
B	11/01/09	PRELIMINARY ISSUE
A	10/20/09	PRELIMINARY ISSUE

NORTH CAROLINA PROFESSIONAL ENGINEER SEAL NO. 032907 STEPHEN E. HUNT 10/21/14

PROJECT No.
N/A

SITE NAME:
ARTHUR GOODMAN PARK

SITE NUMBER:
NC-1009

SITE ADDRESS:
1132 SOUTH TRADE STREET
MATTHEWS, NC 28105

DESIGN TYPE:
COMMUNICATIONS LIGHT POLE MODIFICATION

SHEET TITLE:
ENLARGED SITE PLAN

DRAWING NO.	REVISION:
C-2	1

2-5-2015

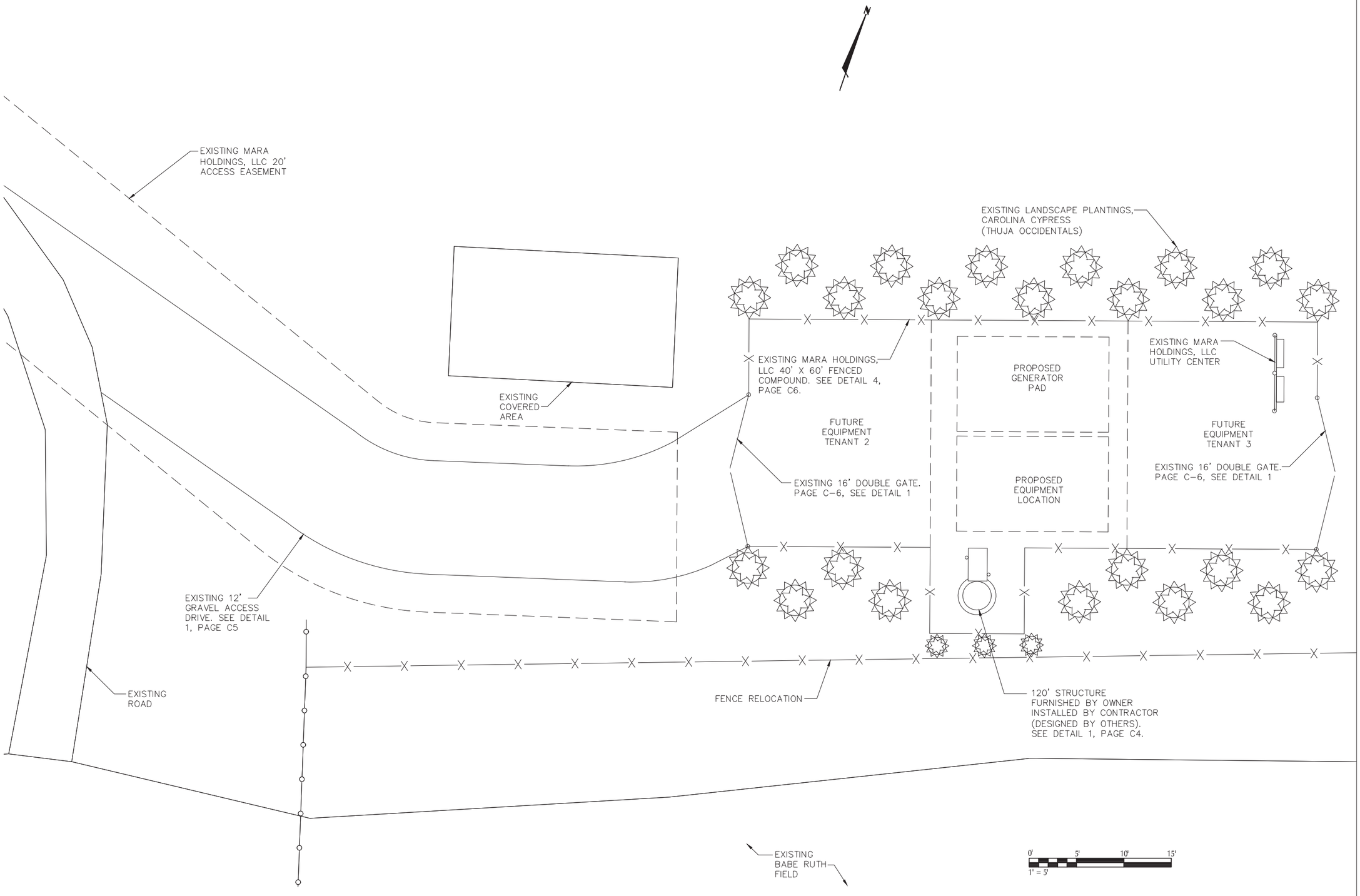

2 | LANDSCAPE PLAN

MARA HOLDINGS, LLC.

TeleCAD Wireless
1961 NORTHPOINT BLVD, SUITE 130
HIXSON, TN 37343
PH: 423-843-9500
FAX: 423-843-9509

THE INFORMATION CONTAINED IN THIS SET OF DOCUMENTS IS PROPRIETARY BY NATURE. ANY USE OR DISCLOSURE OTHER THAN THAT WHICH RELATES TO THE CLIENT IS STRICTLY PROHIBITED.

A&E PROJECT #:	N/A
DRAWN BY:	CAE
CHECKED BY:	CTD

REVISIONS

NO.	DATE	DESCRIPTION
1	10/29/14	TOWER MODIFIED
0	11/11/09	CONSTRUCTION ISSUE
B	11/01/09	PRELIMINARY ISSUE
A	10/20/09	PRELIMINARY ISSUE

NORTH CAROLINA PROFESSIONAL SEAL NO. 032507 ENGINEER STEPHEN E. HUNT
10/2/14

PROJECT No.
N/A

SITE NAME:
ARTHUR GOODMAN PARK

SITE NUMBER:
NC-1009

SITE ADDRESS:
1132 SOUTH TRADE STREET
MATTHEWS, NC 28105

DESIGN TYPE:
COMMUNICATIONS LIGHT POLE MODIFICATION

SHEET TITLE:
LANDSCAPE PLAN

DRAWING NO.	REVISION:
C-3	1

2-5-2015

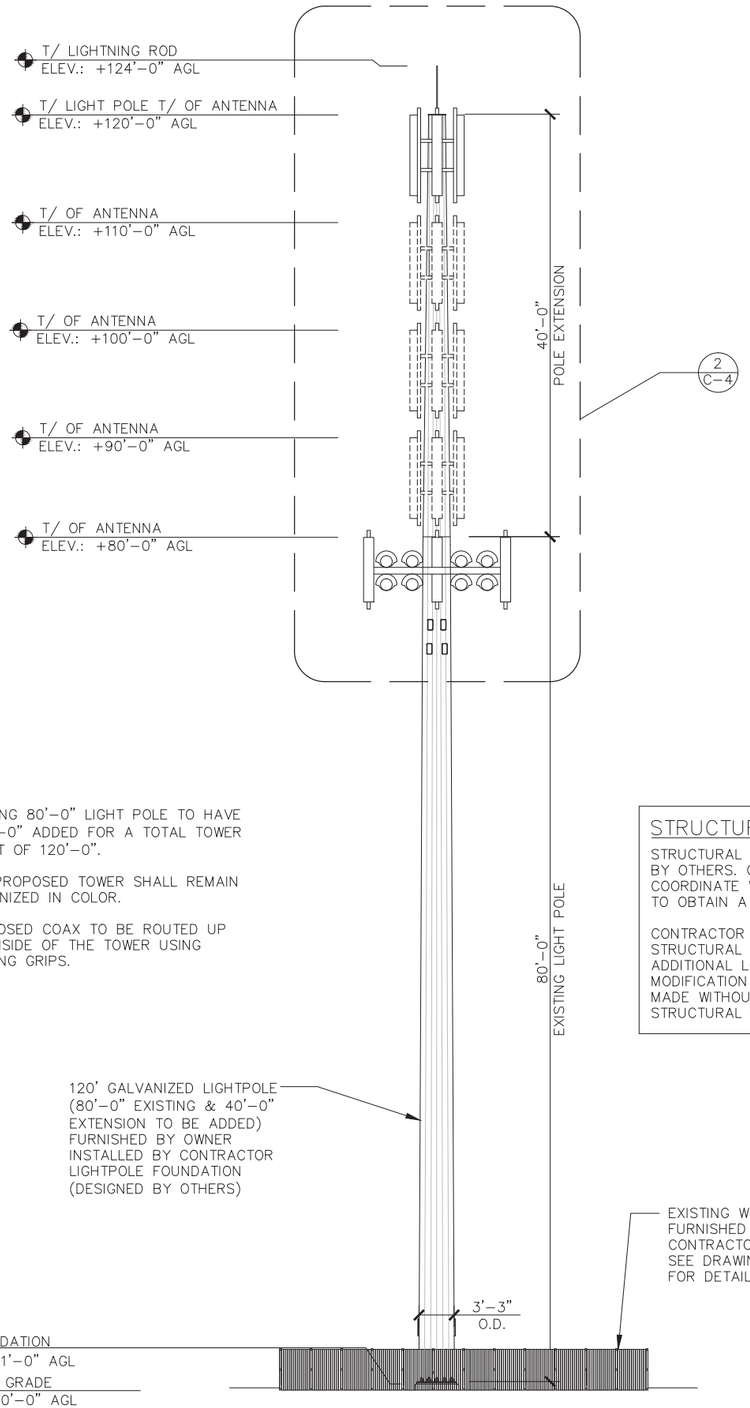

NOTES:
1. EXISTING 80'-0" LIGHT POLE TO HAVE A 40'-0" ADDED FOR A TOTAL TOWER HEIGHT OF 120'-0".
2. THE PROPOSED TOWER SHALL REMAIN GALVANIZED IN COLOR.
3. PROPOSED COAX TO BE ROUTED UP THE INSIDE OF THE TOWER USING HOISTING GRIPS.

STRUCTURAL NOTES:

STRUCTURAL CALCULATION PREPARED BY OTHERS. CONTRACTOR TO COORDINATE WITH ANB REPRESENTATIVE TO OBTAIN A COPY.

CONTRACTOR TO REFER TO TOWER STRUCTURAL CALCULATIONS FOR ADDITIONAL LOADS. NO ERECTION OR MODIFICATION OF TOWER SHALL BE MADE WITHOUT APPROVAL OF STRUCTURAL ENGINEER.

SOUTH ELEVATION

1 ELEVATION VIEW SCALE: N.T.S

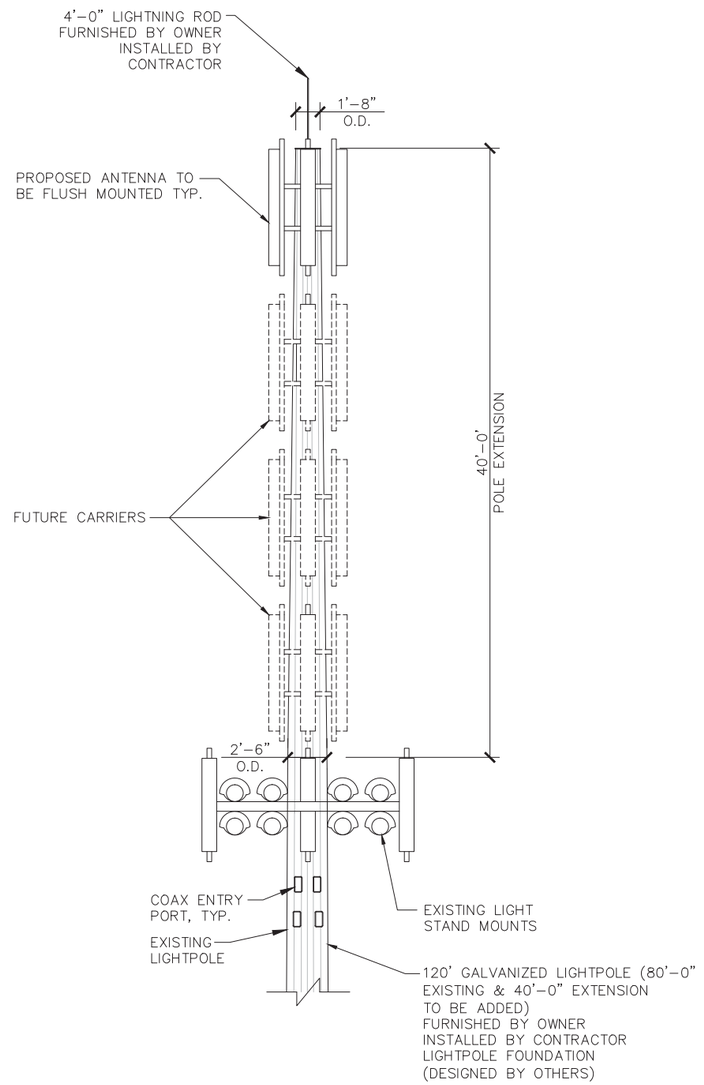

2 ELEVATION VIEW @ TOP OF LIGHT TOWER SCALE 11"x17": 1"=10' / 22"x34": 1"=5"

MARA HOLDINGS, LLC.

TeleCAD Wireless
1961 NORTHPOINT BLVD, SUITE 130
HIXSON, TN 37343
PH: 423-843-9500
FAX: 423-843-9509

THE INFORMATION CONTAINED IN THIS SET OF DOCUMENTS IS PROPRIETARY BY NATURE. ANY USE OR DISCLOSURE OTHER THAN THAT WHICH RELATES TO THE CLIENT IS STRICTLY PROHIBITED.

A&E PROJECT #:	N/A
DRAWN BY:	CAE
CHECKED BY:	CTD

REVISIONS

NO.	DATE	DESCRIPTION
1	10/29/14	TOWER MODIFIED
0	11/11/09	CONSTRUCTION ISSUE
B	11/01/09	PRELIMINARY ISSUE
A	10/20/09	PRELIMINARY ISSUE

NORTH CAROLINA PROFESSIONAL ENGINEER SEAL NO. 032507 STEPHEN E. PUNT 10/29/14

PROJECT No.: N/A

SITE NAME: ARTHUR GOODMAN PARK

SITE NUMBER: NC-1009

SITE ADDRESS: 1132 SOUTH TRADE STREET MATTHEWS, NC 28105

DESIGN TYPE: COMMUNICATIONS LIGHT POLE MODIFICATION

SHEET TITLE: SITE ELEVATIONS

DRAWING NO.	REVISION:
C-4	1

2-5-2015

NOTE:
WEED CONTROL FABRIC SHALL BE USED UNDER ACCESS DRIVE WITH A 36" MINIMUM OVERLAP. CONTRACTOR SHALL INSTALL FABRIC PER MFG. RECOMMENDATIONS.

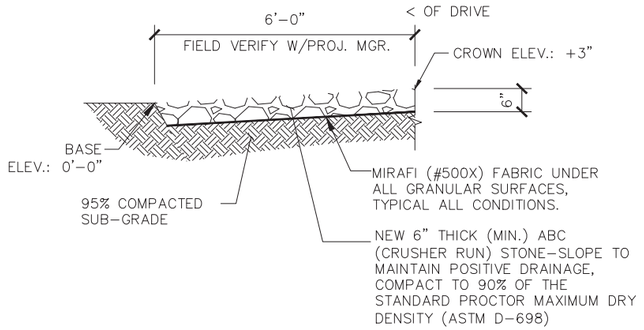

1 ACCESS DRIVE DETAIL SCALE: N.T.S.

NOTE:
WEED CONTROL FABRIC SHALL BE USED UNDER ENTIRE PROPOSED GRAVELED AREA WITH A 36" MINIMUM OVERLAP. CONTRACTOR SHALL INSTALL FABRIC PER MFG. RECOMMENDATIONS.

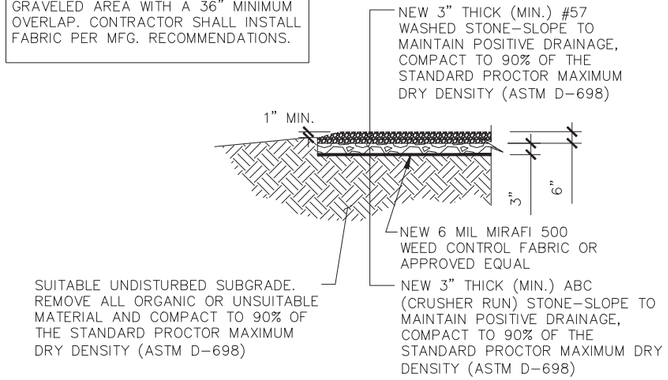

2 COMPOUND FINISH DETAIL SCALE: N.T.S.

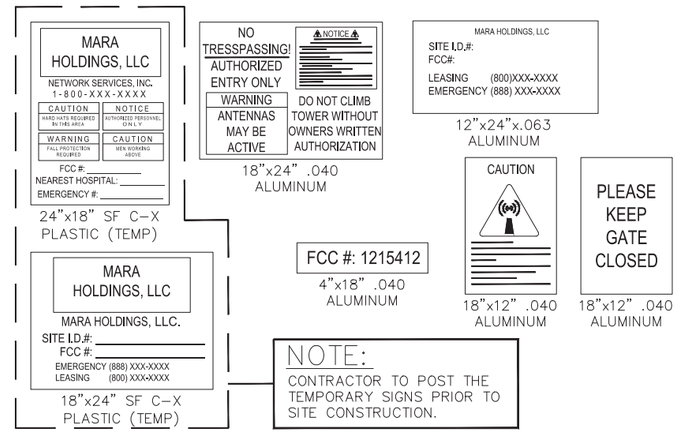

3 SIGN DETAIL SCALE: N.T.S.

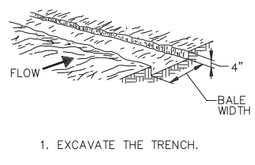
1. EXCAVATE THE TRENCH.

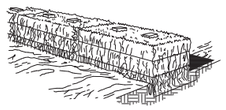
2. PLACE AND STAKE STRAW BALES.

3. WEDGE LOOSE STRAW BETWEEN BALES.

4. BACKFILL AND COMPACT THE EXCAVATED SOIL.

STRAW BALE BARRIER

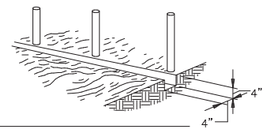
1. SET POSTS AND EXCAVATE A 4"X4" TRENCH UPSLOPE ALONG POSTS.

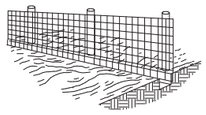
2. STAPLE WIRE FENCING TO THE LINE OF POSTS.

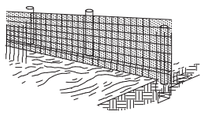
3. ATTACH THE FILTER FABRIC TO THE WIRE FENCE AND EXTEND IT INTO THE TRENCH.

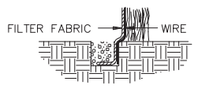

4. EXTENSION OF FABRIC AND WIRE INTO THE TRENCH

SILT FENCE

4 EROSION CONTROL DETAIL SCALE: N.T.S.

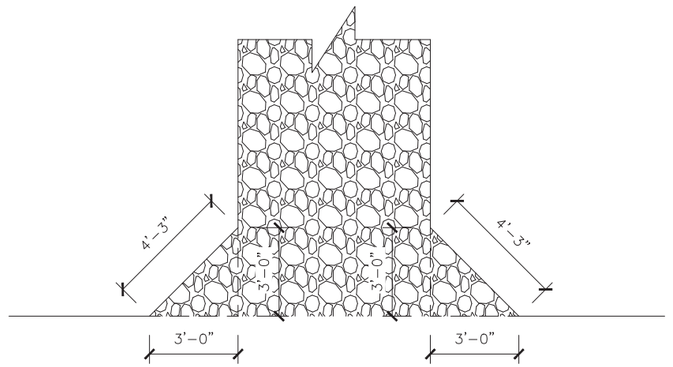

5 TYPICAL ROAD ENTRY SCALE: N.T.S.

6 CULVERT/RIP-RAP DETAIL (NOT USED) SCALE: N.T.S.

MARA HOLDINGS, LLC.

TeleCAD Wireless
1961 NORTHPOINT BLVD, SUITE 130
HIXSON, TN 37343
PH: 423-843-9500
FAX: 423-843-9509

THE INFORMATION CONTAINED IN THIS SET OF DOCUMENTS IS PROPRIETARY BY NATURE. ANY USE OR DISCLOSURE OTHER THAN THAT WHICH RELATES TO THE CLIENT IS STRICTLY PROHIBITED.

A&E PROJECT #:	N/A
DRAWN BY:	CAE
CHECKED BY:	CTD

REVISIONS

NO.	DATE	DESCRIPTION
1	10/29/14	TOWER MODIFIED
0	11/11/09	CONSTRUCTION ISSUE
B	11/01/09	PRELIMINARY ISSUE
A	10/20/09	PRELIMINARY ISSUE

PROJECT No.
N/A

SITE NAME:
ARTHUR GOODMAN PARK

SITE NUMBER:
NC-1009

SITE ADDRESS:
1132 SOUTH TRADE STREET
MATTHEWS, NC 28105

DESIGN TYPE:
COMMUNICATIONS LIGHT POLE MODIFICATION

SHEET TITLE:
SITE DETAILS

DRAWING NO.
C-5

REVISION:
1

2-5-2015

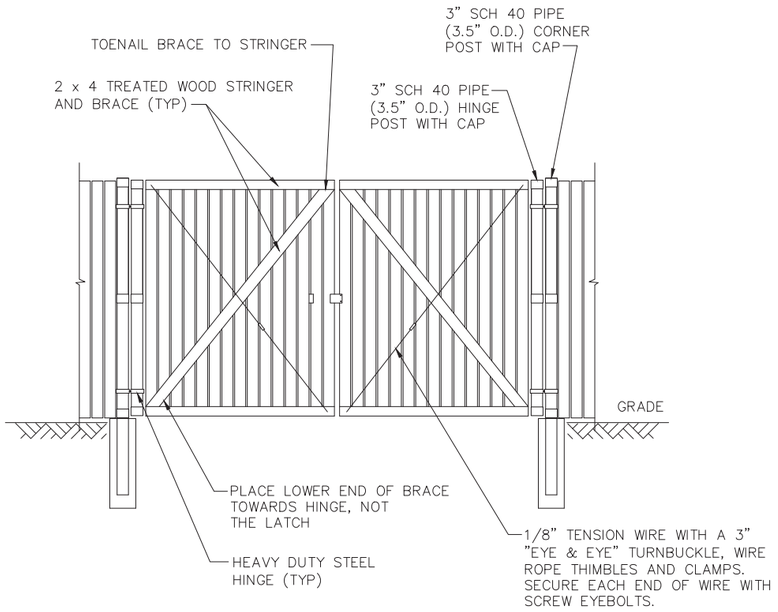

1 WOOD FENCE GATE (INSIDE VIEW) SCALE: N.T.S.

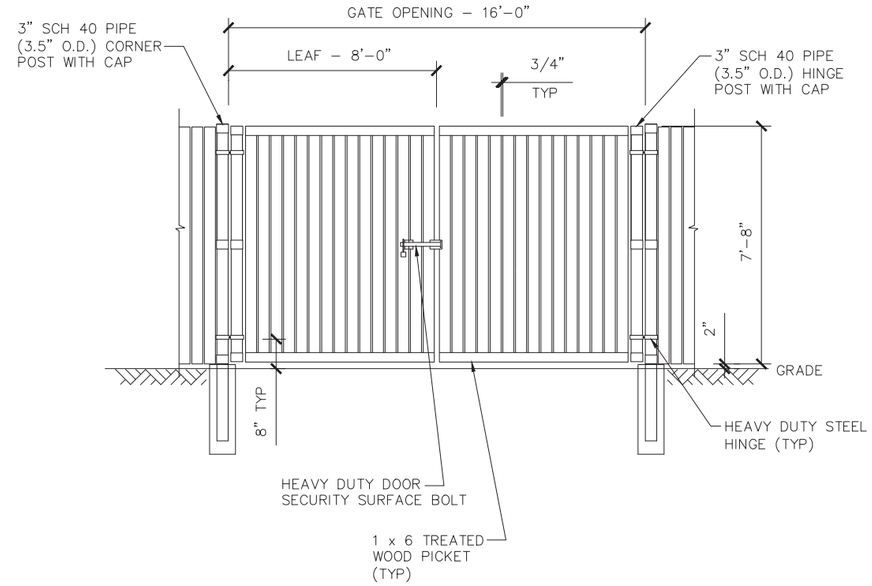

2 WOOD FENCE GATE (OUTSIDE VIEW) SCALE: N.T.S.

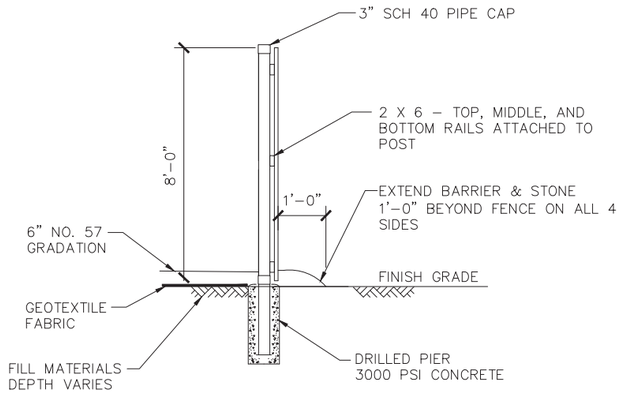

3 FENCE SIDE VIEW SCALE: N.T.S.

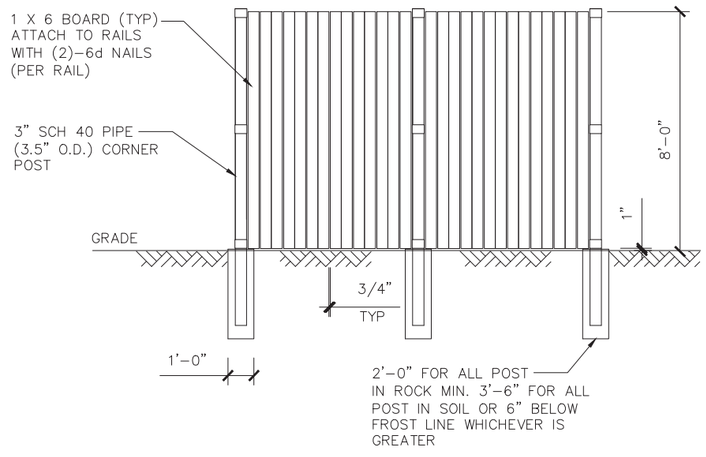

4 WOOD FENCE ELEVATION SCALE: N.T.S.

MARA HOLDINGS, LLC.

TeleCAD Wireless
1961 NORTHPOINT BLVD, SUITE 130
HIXSON, TN 37343
PH: 423-843-9500
FAX: 423-843-9509

THE INFORMATION CONTAINED IN THIS SET OF DOCUMENTS IS PROPRIETARY BY NATURE. ANY USE OR DISCLOSURE OTHER THAN THAT WHICH RELATES TO THE CLIENT IS STRICTLY PROHIBITED.

A&E PROJECT #:	N/A
DRAWN BY:	CAE
CHECKED BY:	CTD

REVISIONS

NO.	DATE	DESCRIPTION
1	10/29/14	TOWER MODIFIED
0	11/11/09	CONSTRUCTION ISSUE
B	11/01/09	PRELIMINARY ISSUE
A	10/20/09	PRELIMINARY ISSUE

NORTH CAROLINA PROFESSIONAL ENGINEER SEAL NO. 032507 STEPHEN E. HUNT 10/21/14

PROJECT No.: N/A

SITE NAME: ARTHUR GOODMAN PARK

SITE NUMBER: NC-1009

SITE ADDRESS: 1132 SOUTH TRADE STREET MATTHEWS, NC 28105

DESIGN TYPE: COMMUNICATIONS LIGHT POLE MODIFICATION

SHEET TITLE: FENCE DETAILS

DRAWING NO.	REVISION:
C-6	1